ORTAL
YOUR LIFE. YOUR FIRE

Wilderness FR51 Screen

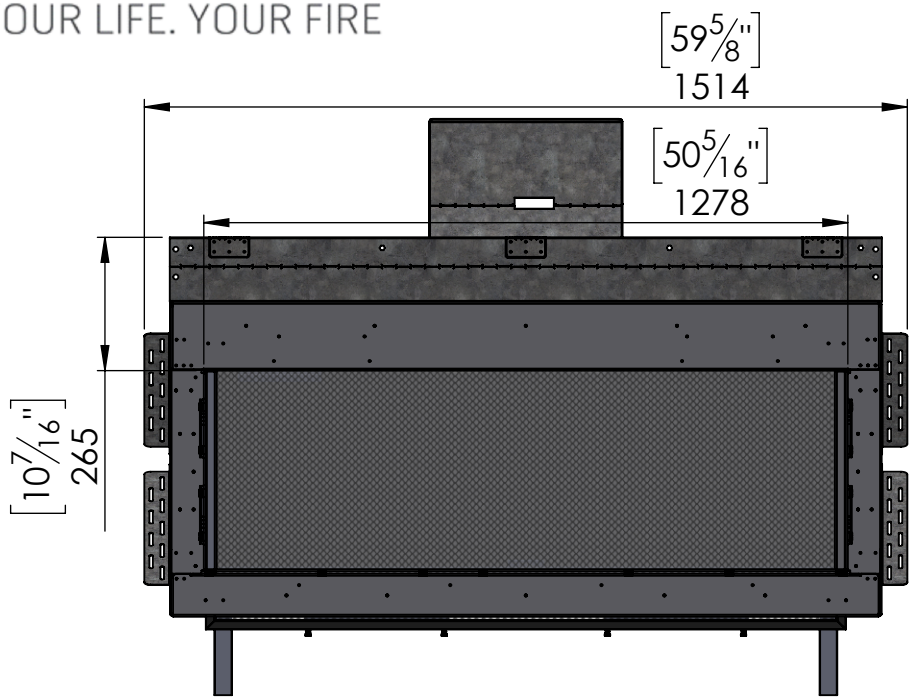

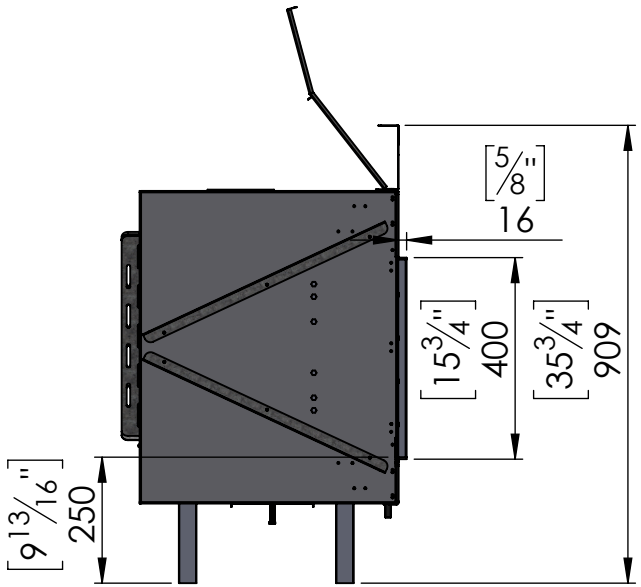

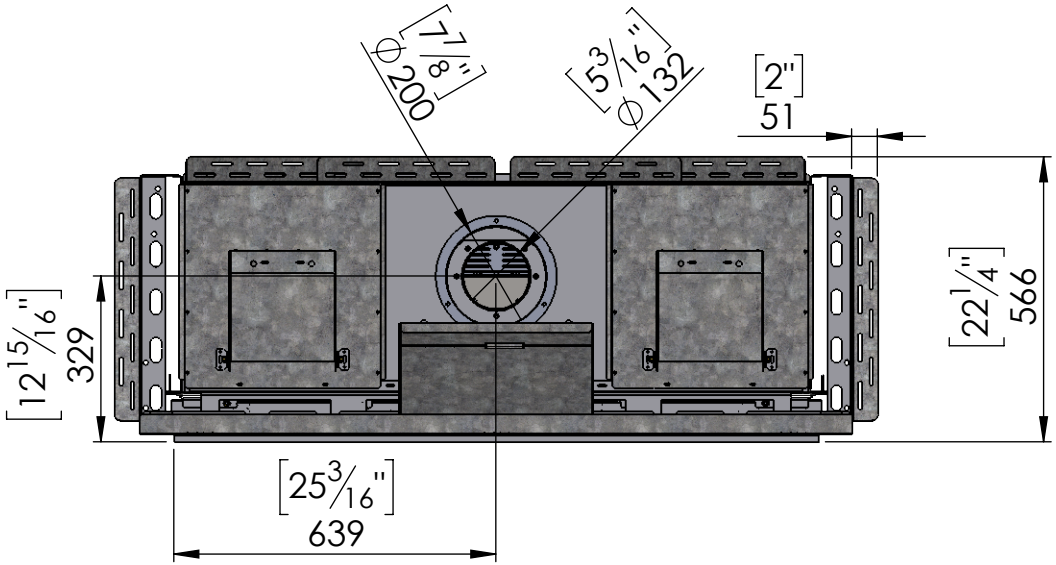

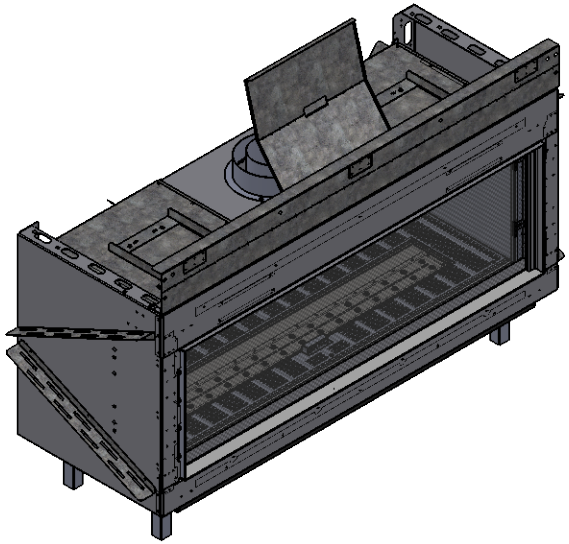

9/8/2021