ORTAL
YOUR LIFE. YOUR FIRE

RS 96 DG

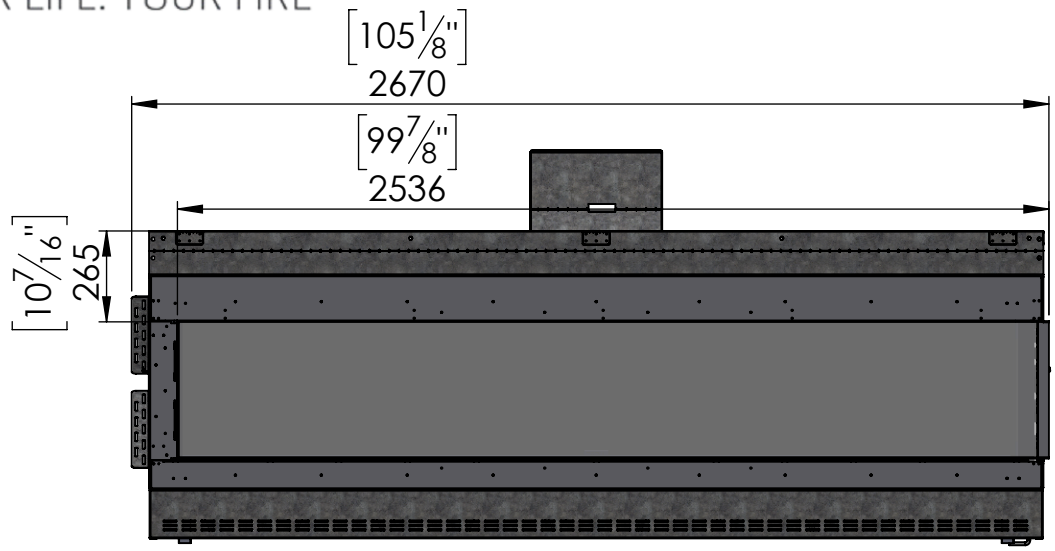

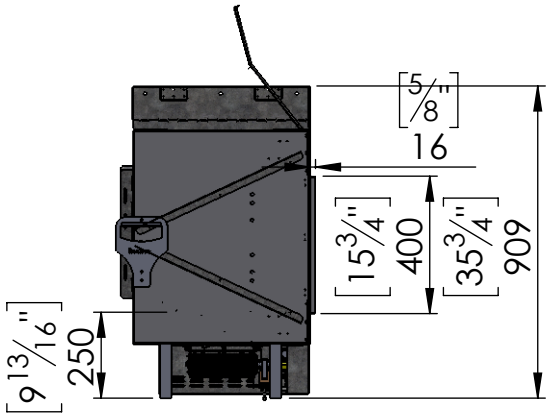

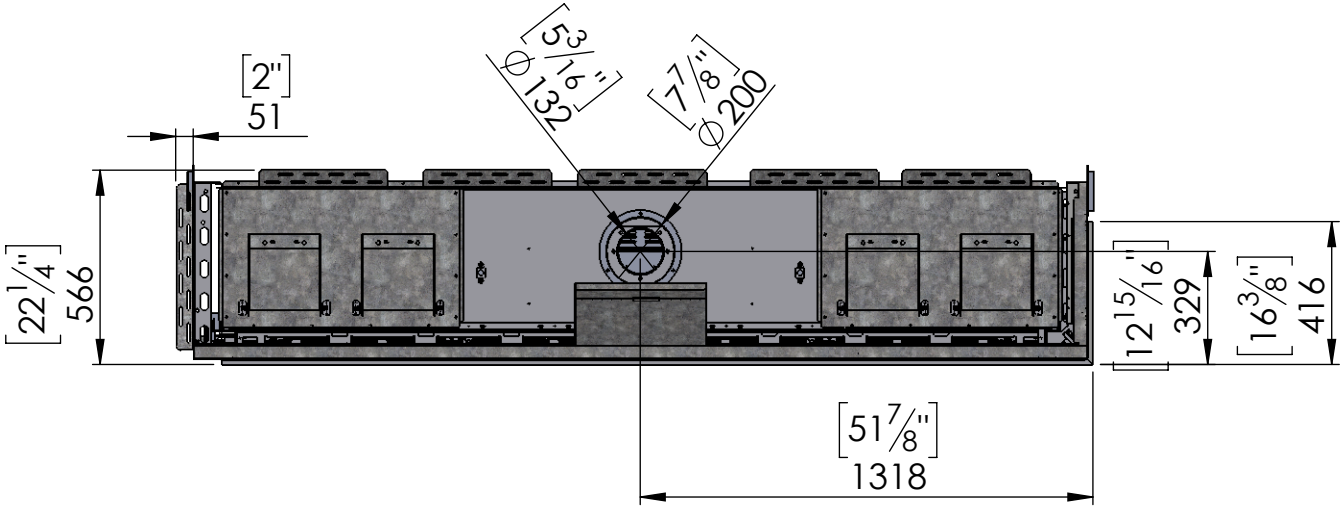

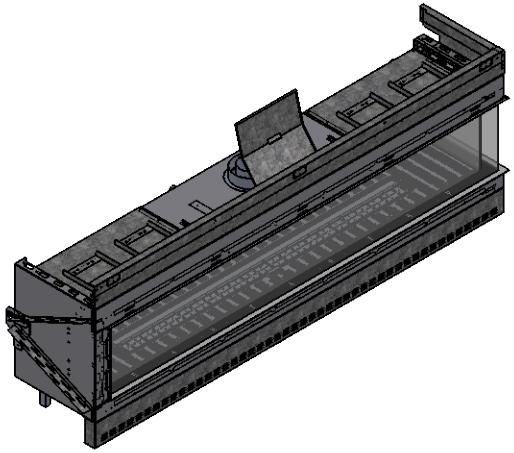

9/12/2021